Osaka Gas Experimental Housing “NEXT 21” Introduction of Phase-4 Residential Experiment

Outline of NEXT 21

Architectural outline of NEXT 21

Experimental residence where the ideal style of urban multifamily housing for the near-future society is sought and verified

Completion: October 1993

Address: 6-16, Shimizudani-cho, Tennoji-ku, Osaka City

Site: 1,543 m^2

Building size: Six stories above ground and one story underground

Dwellings & size: 18 units

(32 m^2 to 166 m^2; Average 115 m^2)

Total floor area: 4,577 m^2

Green area: 934 m^2

Architectural system

Testing state-of-the-art systems possible at that time

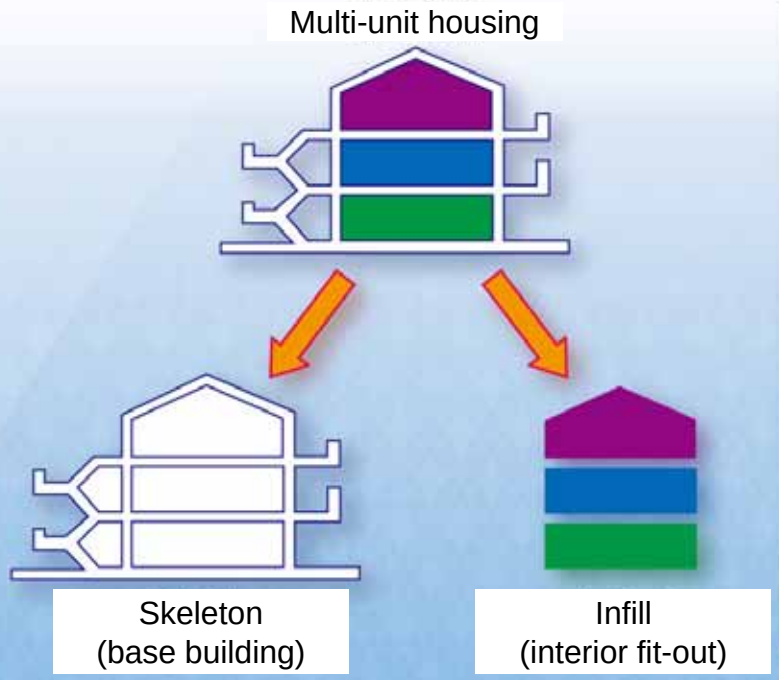

Skeleton-infill construction

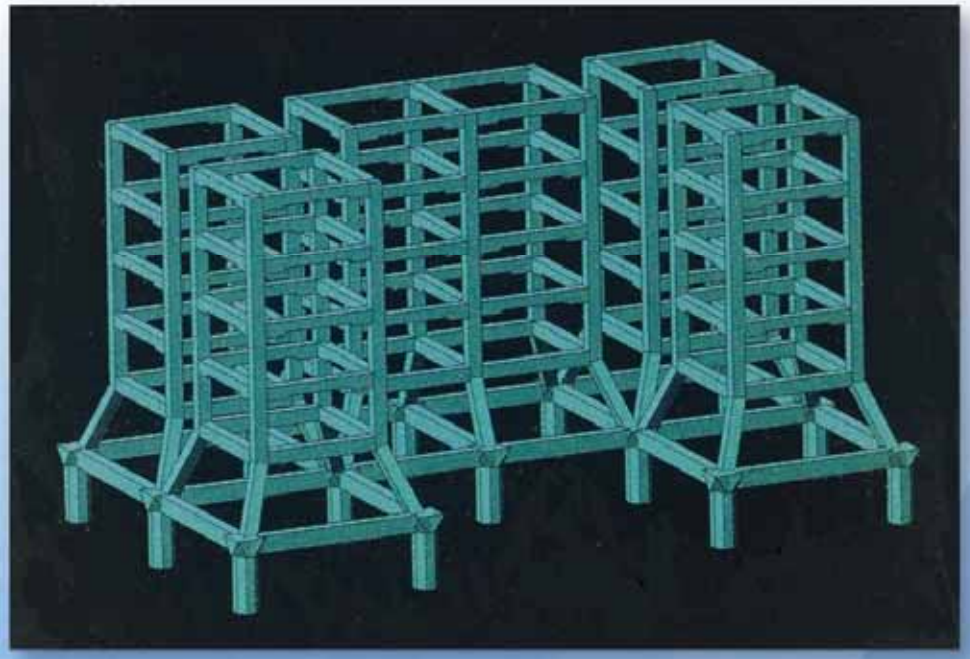

Skeleton of NEXT 21 (Base building)

Architectural system

Testing state-of-the-art systems possible at that time

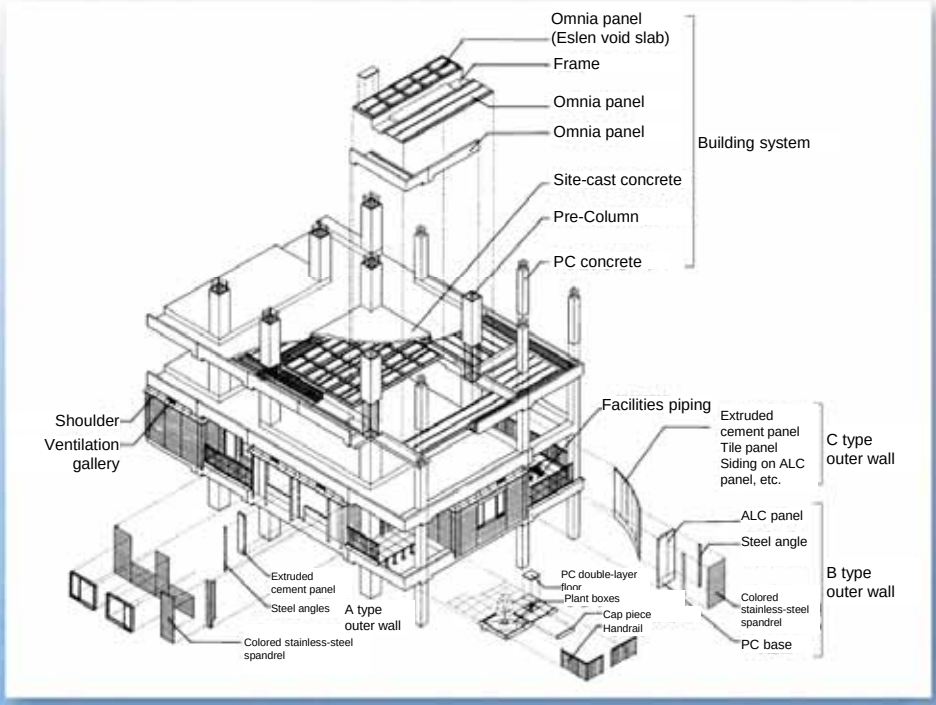

Systems building

Architectural system

Testing state-of-the-art systems possible at that time

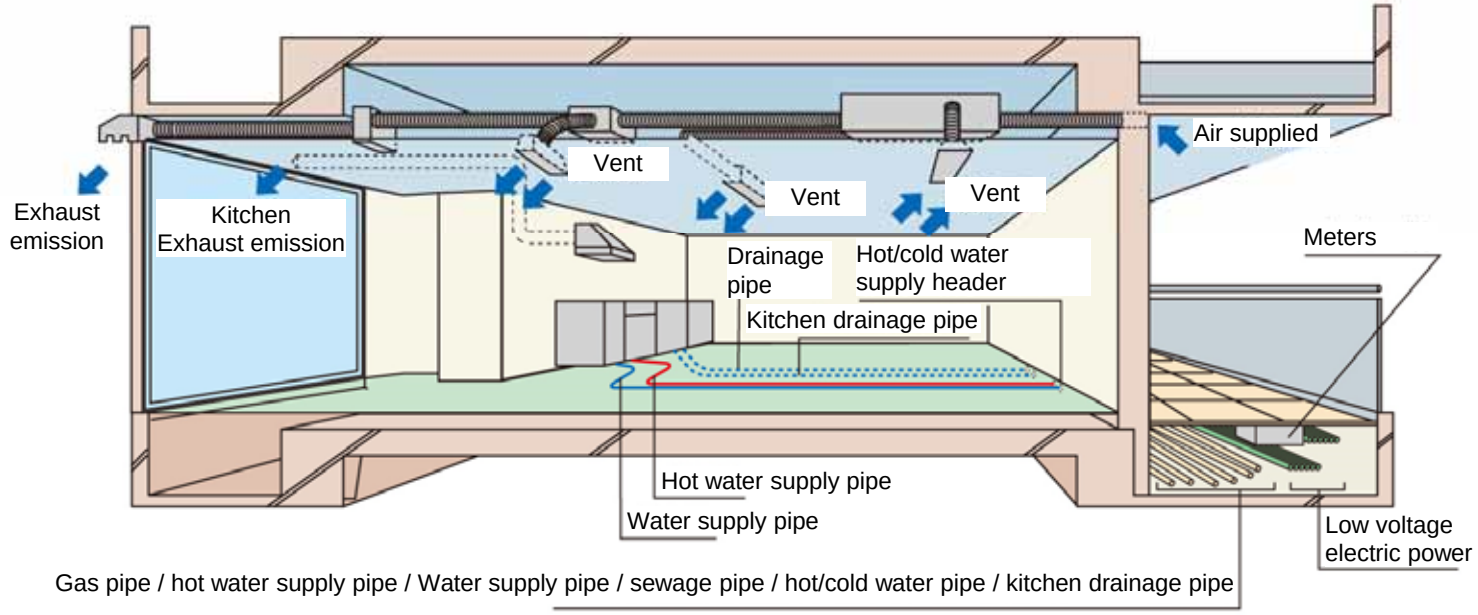

Flexible piping system

Symbiosis with nature

Testing the restoration of the natural ecosystem in an urban area

Phase-1 Residential Experiment (FY1994 - 1998)

Seeking to simultaneously realize amenity as well as energy-saving, environmentally friendly living

Energy system controller

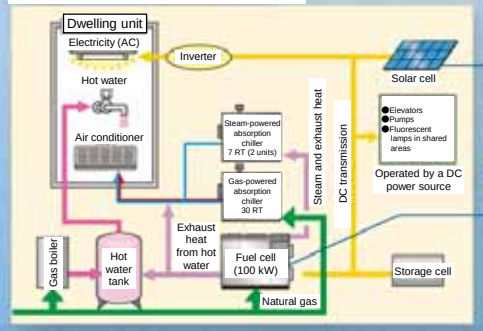

●Solar cell

●Phosphoric-acid fuel cell (100 kW)

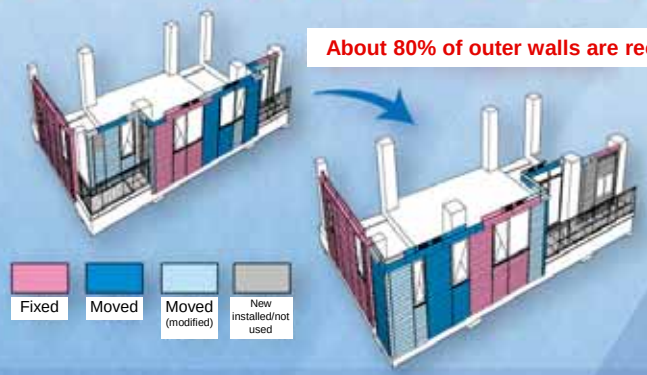

About 80% of outer walls are recycled.

Phase-2 Residential Experiment (FY2000 - 2004)

Special consideration to the global environment and comfortable daily living

Before renovation
"House of a three-generation family"

After renovation
"Woody House" and "House of next-generation family"

Phase-3 Residential Experiment (FY2007 - 2011)

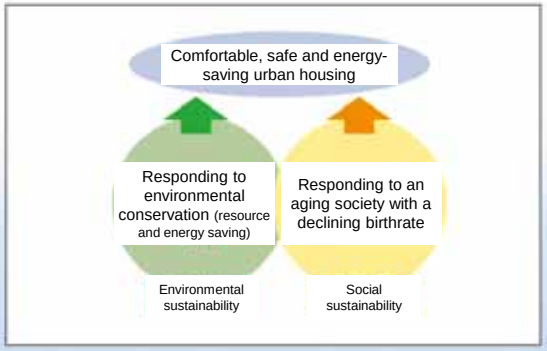

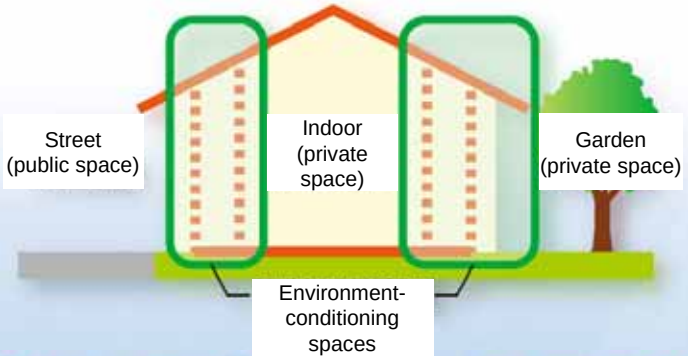

Housing and energy systems to support sustainable urban living

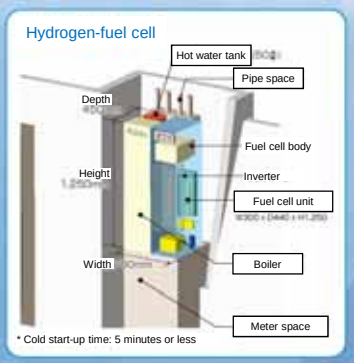

History of NEXT 21 Residential Experiments

NEXT21

1994 — **Phase 1**
16 dwelling units
Seeking to simultaneously realize "amenity" and "energy-saving, environmentally-friendly living"

2000 — **Phase 2**
16 dwelling units
Special consideration of global environment and comfortable daily living

2007 — **Phase 3**
16 dwelling units
Housing and energy systems to support sustainable urban living

2013 — **Phase 4**
Environmentally friendly, spiritually rich living
Urban multi-unit housing encouraging close relationships among people, nature and energy.

The significance of NEXT 21 and the results of the residential experiments:

1. The demonstration model of environmentally symbiotic housing

2. The demonstration model of sustainable housing (= social assets) characterized by a long lasting “skeleton” (base building and utility systems) and “infill” (interior fit-out – “everything behind your front door”)

3. To provide the opportunity for testing, monitoring and evaluating home appliances and housing facilities/systems

The significance of NEXT 21 and the results of the residential experiments:

1. The demonstration model of environmentally symbiotic housing

The significance of NEXT 21 and the results of the residential experiments:

2. The demonstration model of sustainable housing (= social assets) characterized by a long lasting “skeleton” (base building and utility systems) and “infill” (interior fit-out – “everything behind your front door”)

The significance of NEXT 21 and the results of the residential experiments:

3. To provide the opportunity for testing, monitoring and evaluating home appliances and housing facilities/systems

NEXT21 Phase-4 Residential Experiment

NEXT21 Phase-4 Residential Experiment

Concept

Environmentally friendly, spiritually rich living

Urban multi-unit housing encouraging close relationships among people, nature and energy.

The Concept of Phase 4

Environmentally friendly, spiritually rich living

Urban multi-unit housing encouraging close relationships among people, nature and energy

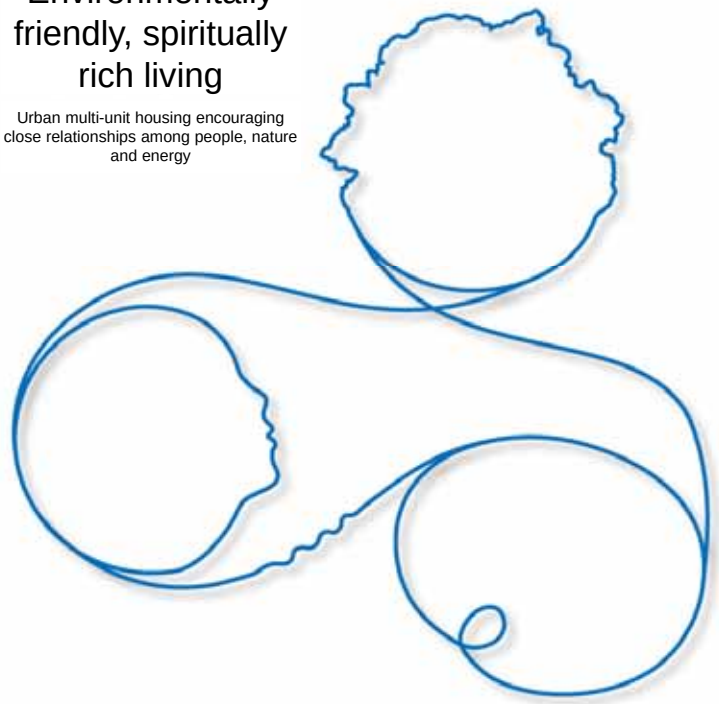

The Concept of Phase 4

Environmentally friendly, spiritually rich living

Urban multi-unit housing encouraging close relationships among people, nature and energy

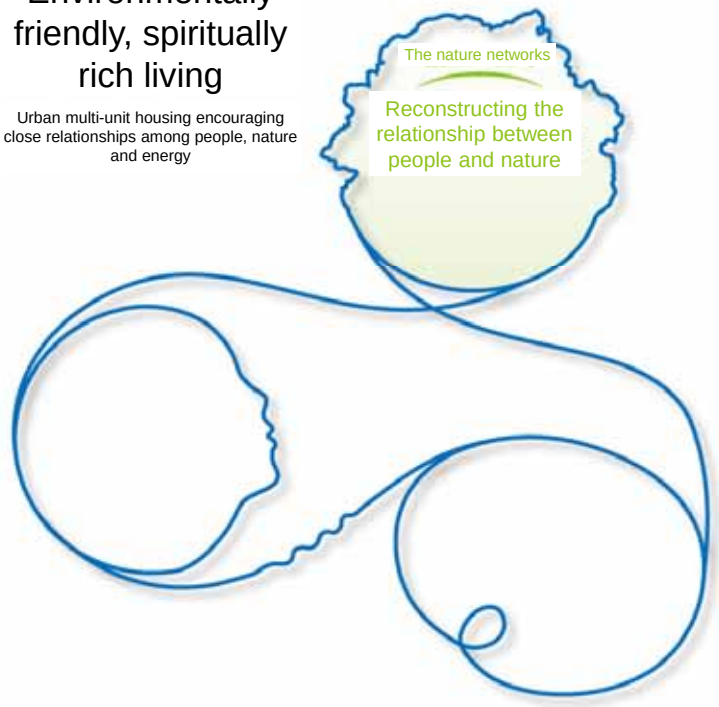

The Concept of Phase 4

Environmentally friendly, spiritually rich living

Urban multi-unit housing encouraging close relationships among people, nature and energy

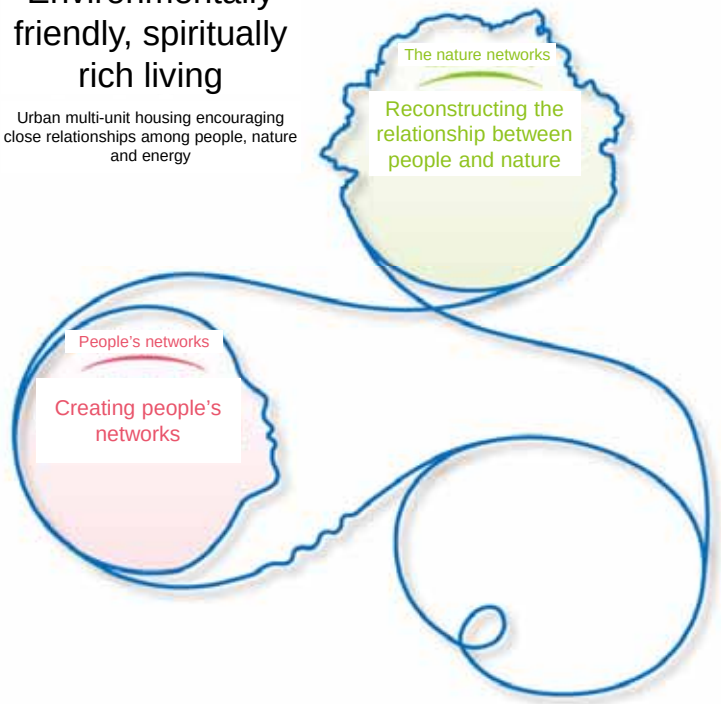

The Concept of Phase 4

Environmentally friendly, spiritually rich living

Urban multi-unit housing encouraging close relationships among people, nature and energy

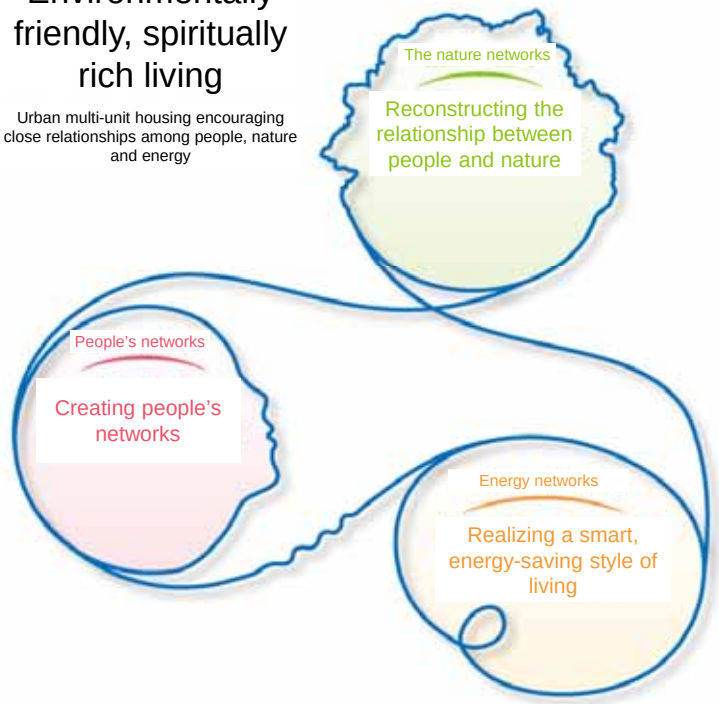

The Concept of Phase 4

Environmentally friendly, spiritually rich living

Urban multi-unit housing encouraging close relationships among people, nature and energy

The Concept of Phase 4

1. **Experiments on housing and living**

   Verifying and proposing housing and manners of living responding to diverse lifestyles in the future

2. **Experiments on energy systems**

   Verifying the next-generation energy system to realize smart condominiums

NEXT21 Phase-4 Residential Experiment

Experiments on Housing and Living

Residence evaluation through lifestyle surveys

Evaluating residences by surveying lifestyles in individual residences

Experiments on housing and living

1. Housing that creates a people's network, while responding to lifestyles in an aging society with a declining birthrate
2. Housing that is environmentally friendly and symbiotic with nature, while inheriting the local residential culture

Proposals and experiments on environment-conditioning spaces

Traditional house design in temperate regions in Japan

House design with a focus on summer

Houses should be designed with a focus on summer.

From the 55th passage of Tsurezuregusa by Yoshida Kenko

Proposals and experiments on environment-conditioning spaces

The use of multiple layers helps optimize indoor thermal environment.

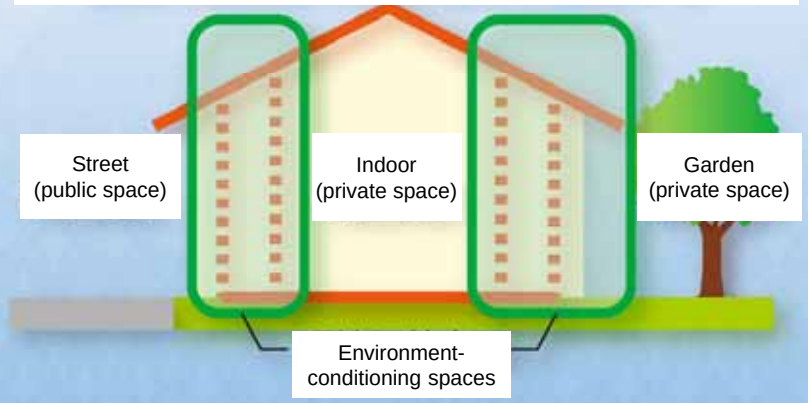

Proposals and experiments on environment-conditioning spaces

The use of multiple layers helps optimize indoor thermal environment.

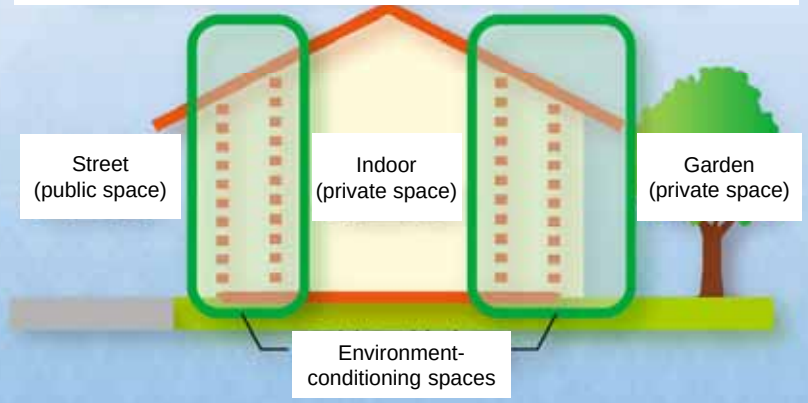

Proposals and experiments on environment-conditioning spaces

- **You can appreciate a sense of the season, even on a hot (or chilly) day.**

  Cherry-blossom viewing, moon viewing, watermelon splitting, water play, barbecues, the Star Festival, fireworks, etc.

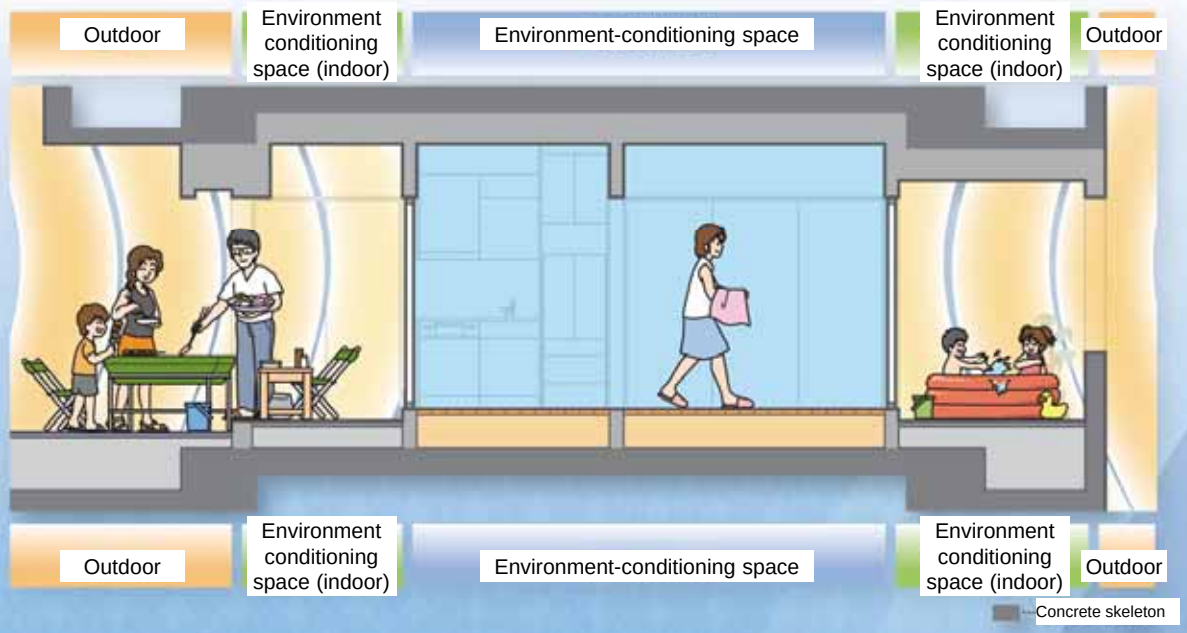

Proposals and experiments on environment-conditioning spaces

- **You can enjoy the comfortable fresh air of the outdoor environment.**

  Child's play, basking in the sun, enjoying the cool evening breeze, playing go, reading, working, studying, napping, enjoying meals, etc.

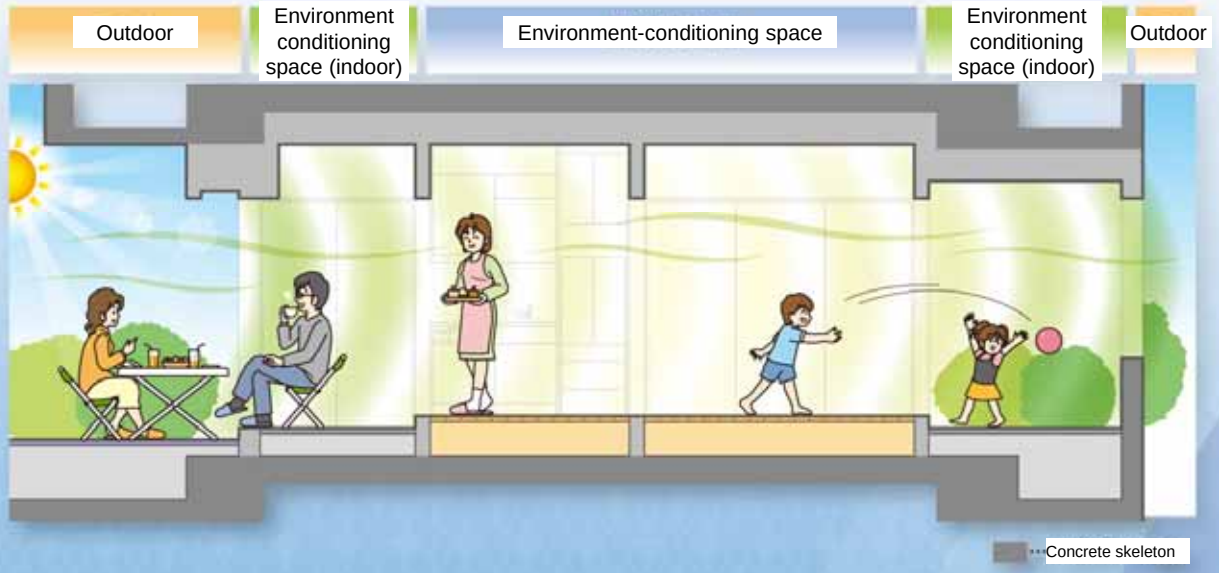

Proposals and experiments on environment-conditioning spaces

- **Improving the efficiency of air conditioning by limiting heating and cooling in smaller spaces**

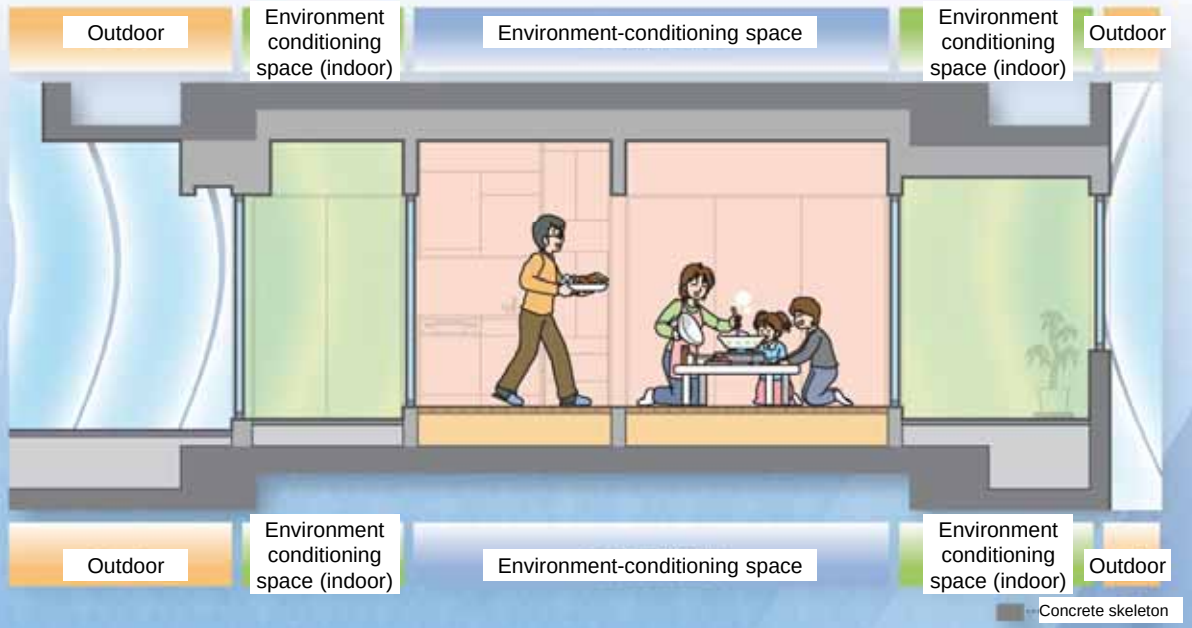

Proposals and experiments on intermediate spaces

Creating private exchange spaces open to a shared zone and intermediate spaces to the local community to facilitate people's close relationships

A private space inside a dwelling unit open to a shared zone

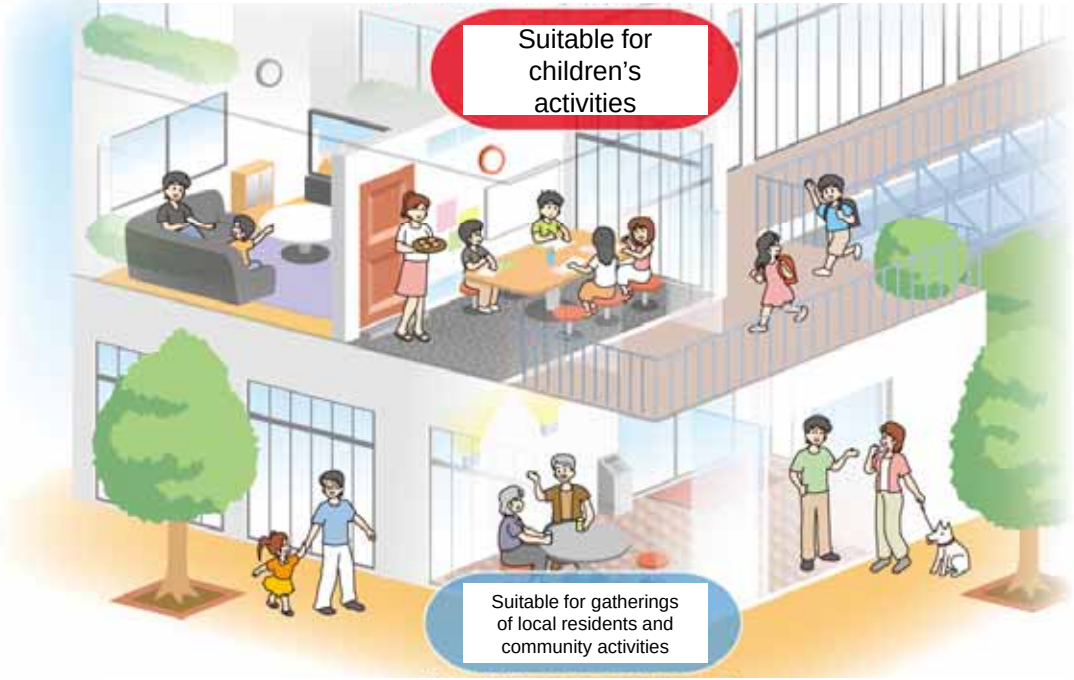

A shared space in NEXT21 open to the outside

Unit #305: House with “blank” spaces

Unit #403: Resilient House

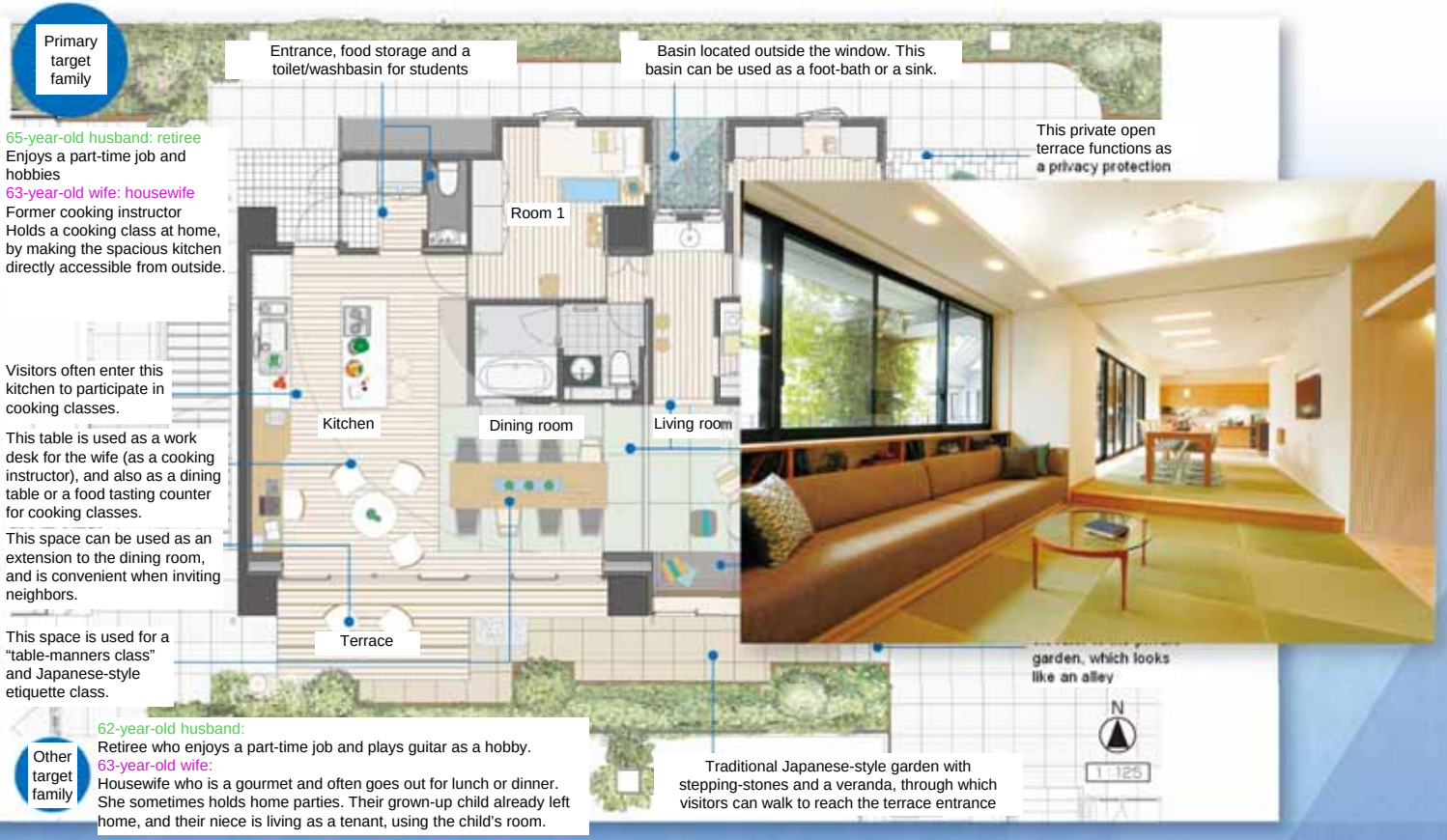

Proposals and experiments on intermediate spaces

Creating private exchange spaces open to a shared zone and intermediate spaces to the local community to facilitate people's close relationships

A private space inside a dwelling unit open to a shared zone

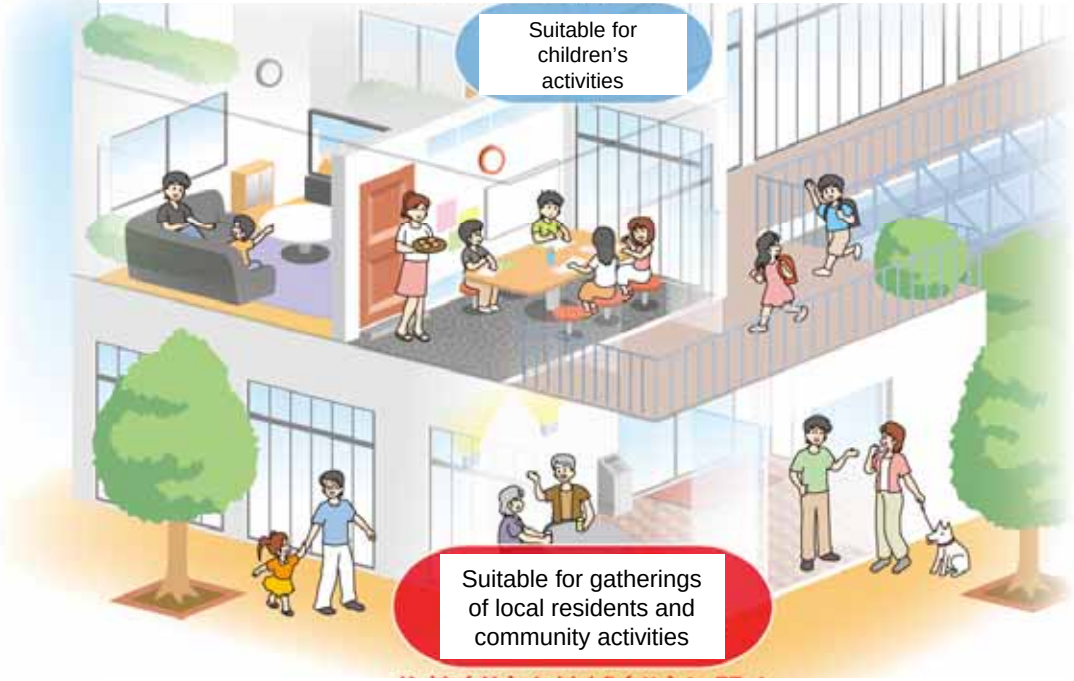

A shared space in NEXT21 open to the outside

Promotion of people's interaction through the use of an activity space

Creating an activity space made open to the nearby community to conduct various activities

To be used by NEXT 21 residents to create communication opportunities

To be used by NEXT 21 residents and local residents together to promote their exchanges

To be used by U-CoRo members for their activities to discover, share and utilize the understanding of the nearby community.

Community lab
U-CoRo

Demonstration experiments on nature and greenery

Creating “green corridors” within the residential building site to help provide a nature-rich urban living environment

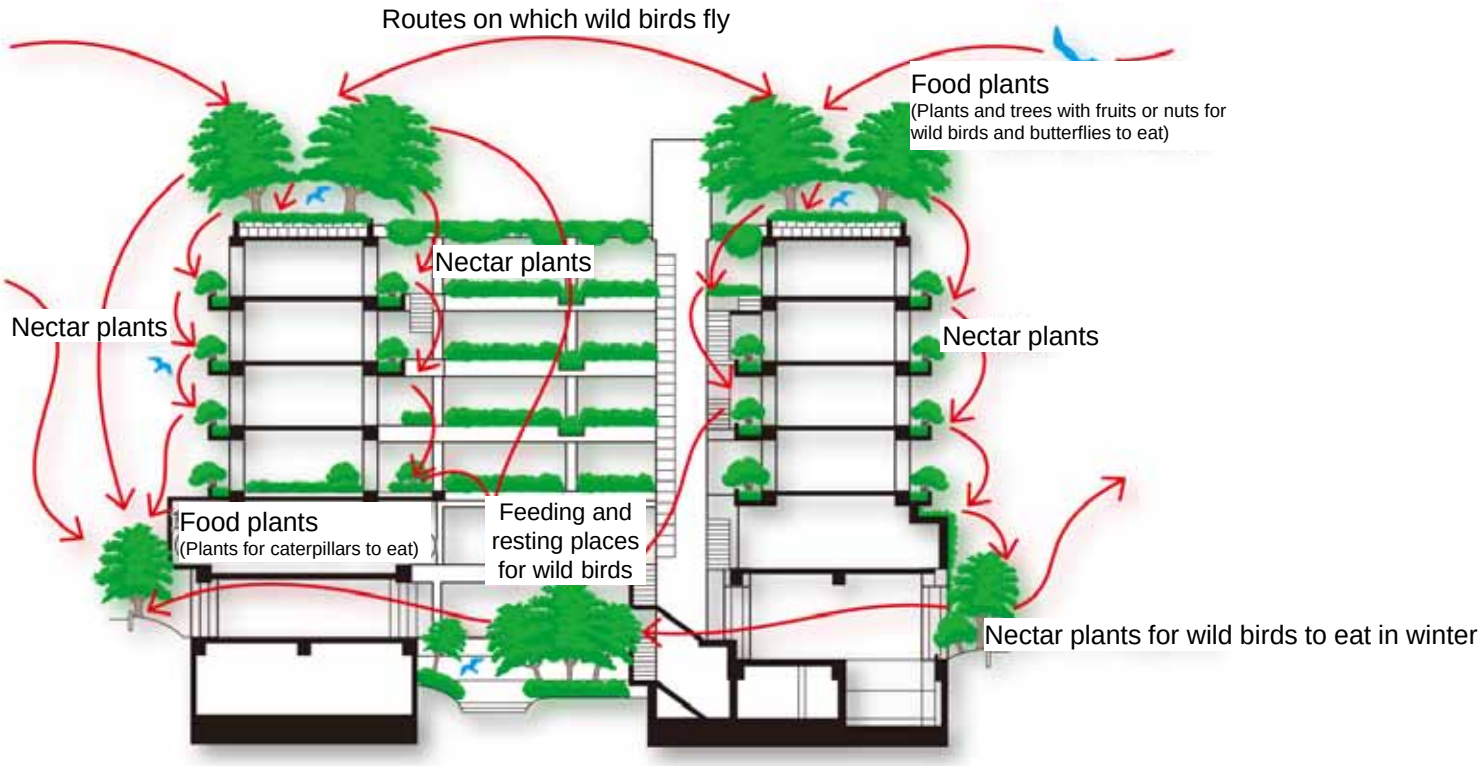

Redevelopment of a residential environment where people can enjoy the blessings of plants, breeze and sunlight in the urban area

Improving and rebuilding “green corridors”

Redevelopment of an ecological garden

Development situation of greenery on the rooftop

Redevelopment of greenery – Ways of development

Creating greenery designed to be connected with plants on each floor so that wild birds and butterflies can fly around from the basement to the rooftop

Designing dwelling units so that residents can feel the changes of nature through the five physical senses, observing plants growing and wild birds flying around from the basement to the rooftop in their daily lives

NEXT21 Phase-4 Residential Experiment

Experiments on Energy Systems

Experimental items for energy systems

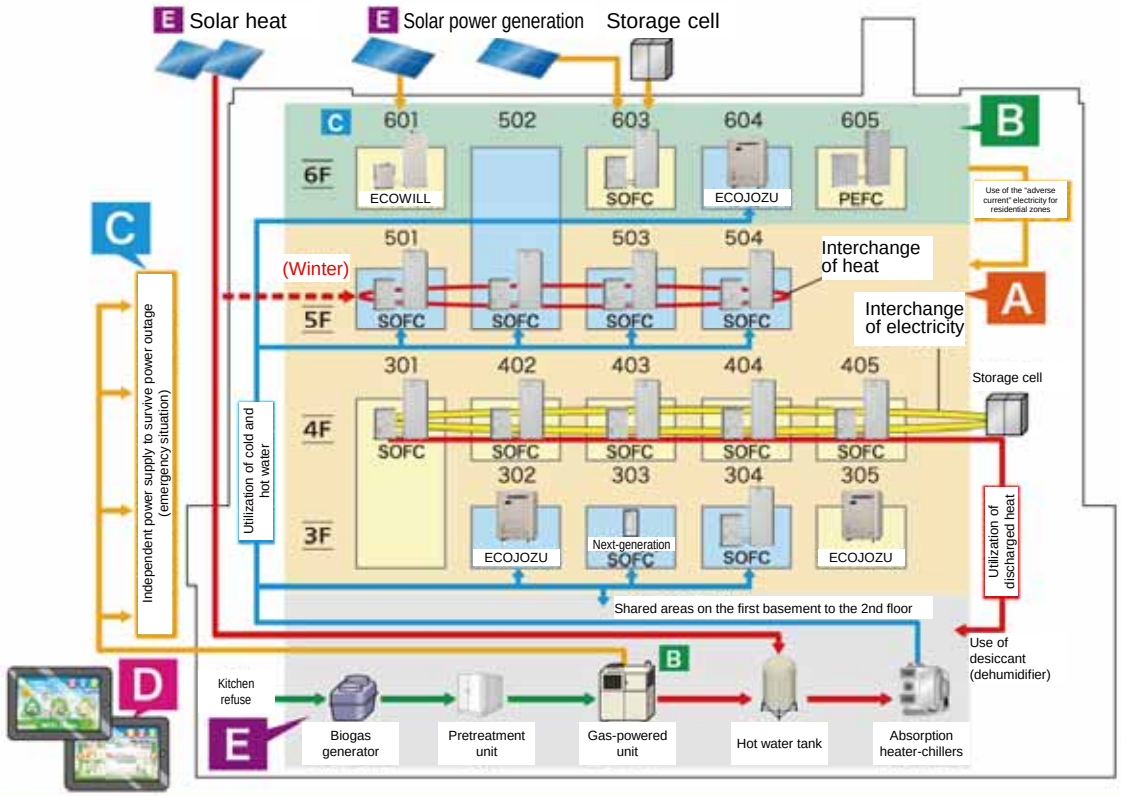

A Decentralized installation of SOFCs and energy interchanges

B Demand response scheme and the adverse current mechanism

C Independent power supply system

D Introduction of the HEMS

E Renewable energy in combination with conventional energy

Experimental items for energy systems

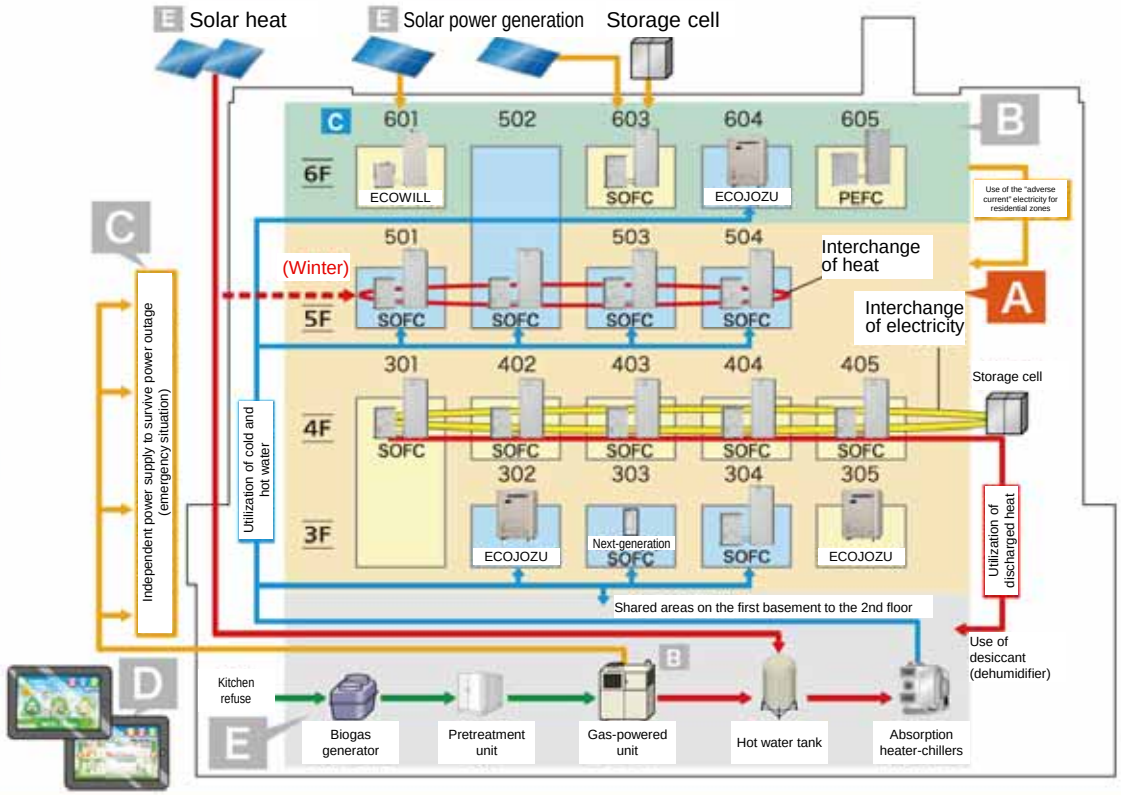

A Decentralized installation of SOFCs and energy interchanges

B Demand response scheme and the adverse current mechanism

C Independent power supply system

D Introduction of the HEMS

E Renewable energy in combination with conventional energy

Air conditioners installed in individual dwelling units | Heater-chillers

A. Decentralized installation of SOFCs and energy interchanges

Solid Oxide Fuel Cell (SOFC) cogeneration system

ENE-FARM Type S (launched in April 2012)

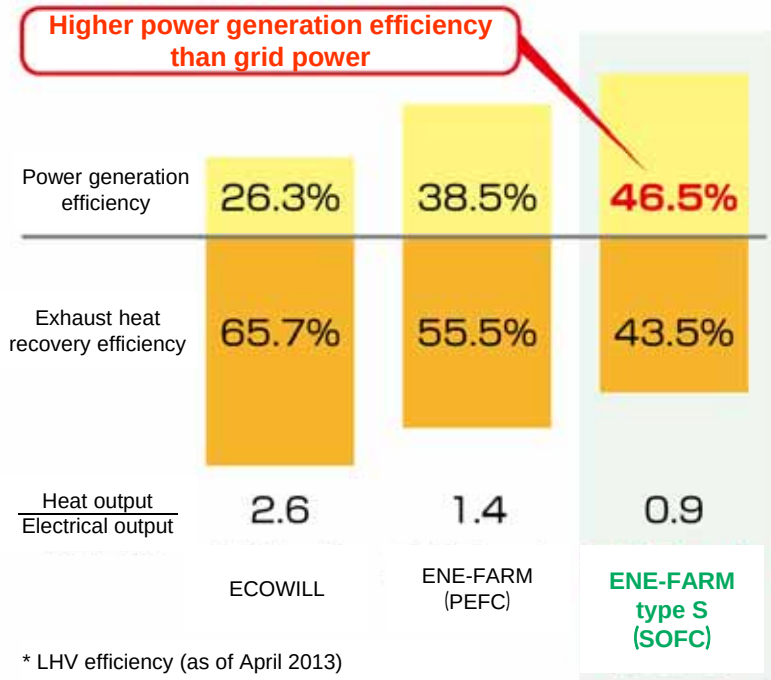

* LHV efficiency (as of April 2013)

A. Decentralized installation of SOFCs and energy interchanges

(1) Dwelling units share the capacity of SOFCs.

Taking full advantage of the power energy of highly efficient SOFCs

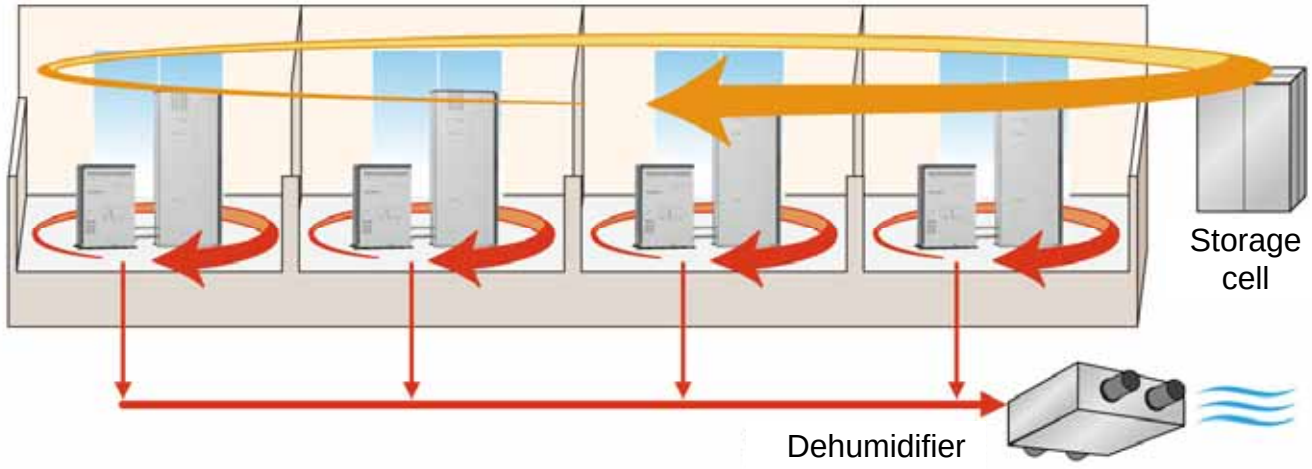

- Maintaining the rated-power high-efficiency operation of SOFCs in 4th-floor dwelling units as far as possible
- Promoting interchanges of surplus electricity or charging with storage cells
- Collecting surplus heat discharge from SOFCs to be used by dehumidifiers installed in shared zones

A. Decentralized installation of SOFCs and energy interchanges

(2) Effective heat utilization through the combined use of SOFCs and solar heat

Forecasting the improvement of power generation efficiency of SOFCs and the decline of heat output and compensating for the lack of discharged heat by using solar heat in winter

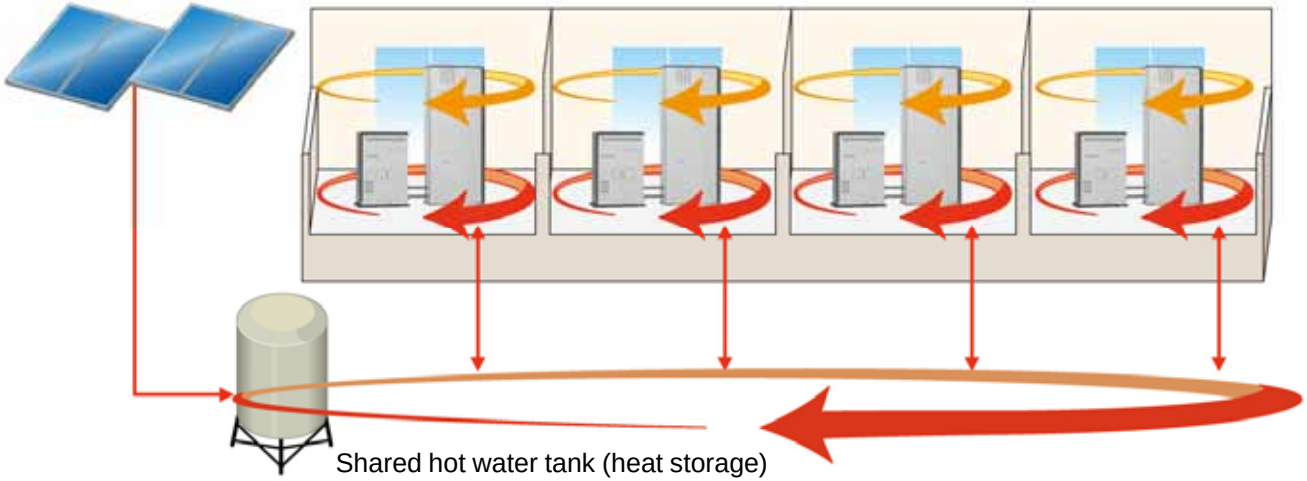

- Operating SOFCs in 5th-floor dwelling units in accordance with the electricity demand of each dwelling unit
- Using hot water generated through solar heat panels to save energy in winter
- Sending surplus waste heat to another dwelling unit in need

A. Decentralized installation of SOFCs and energy interchanges

(3) Test operation of the next-generation, high-efficiency SOFC prototype

Aiming for higher power generation efficiency and small-size SOFCs

	2012 model	Next-generation model (goal)
Power generation efficiency(*)	46.5%	55%
Exhaust heat recovery rate(*)	43.5%	30%
Capacity of hot water tank	90L	10～30L

(*) in LHV

2012 model

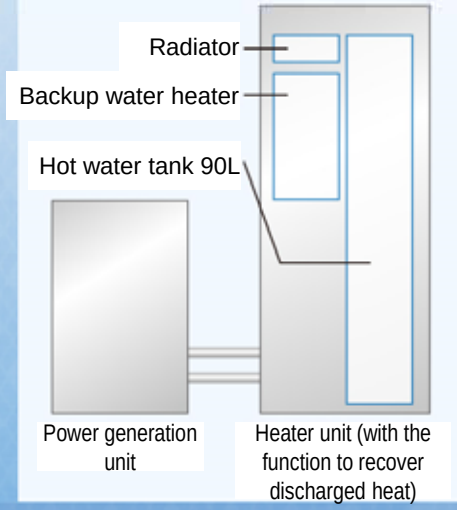

Next-generation model

The backup water heater units are of a conventional type.

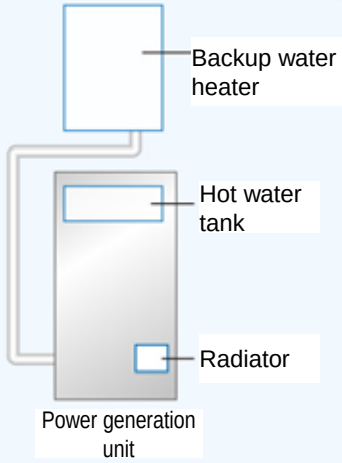

Experimental items for energy systems

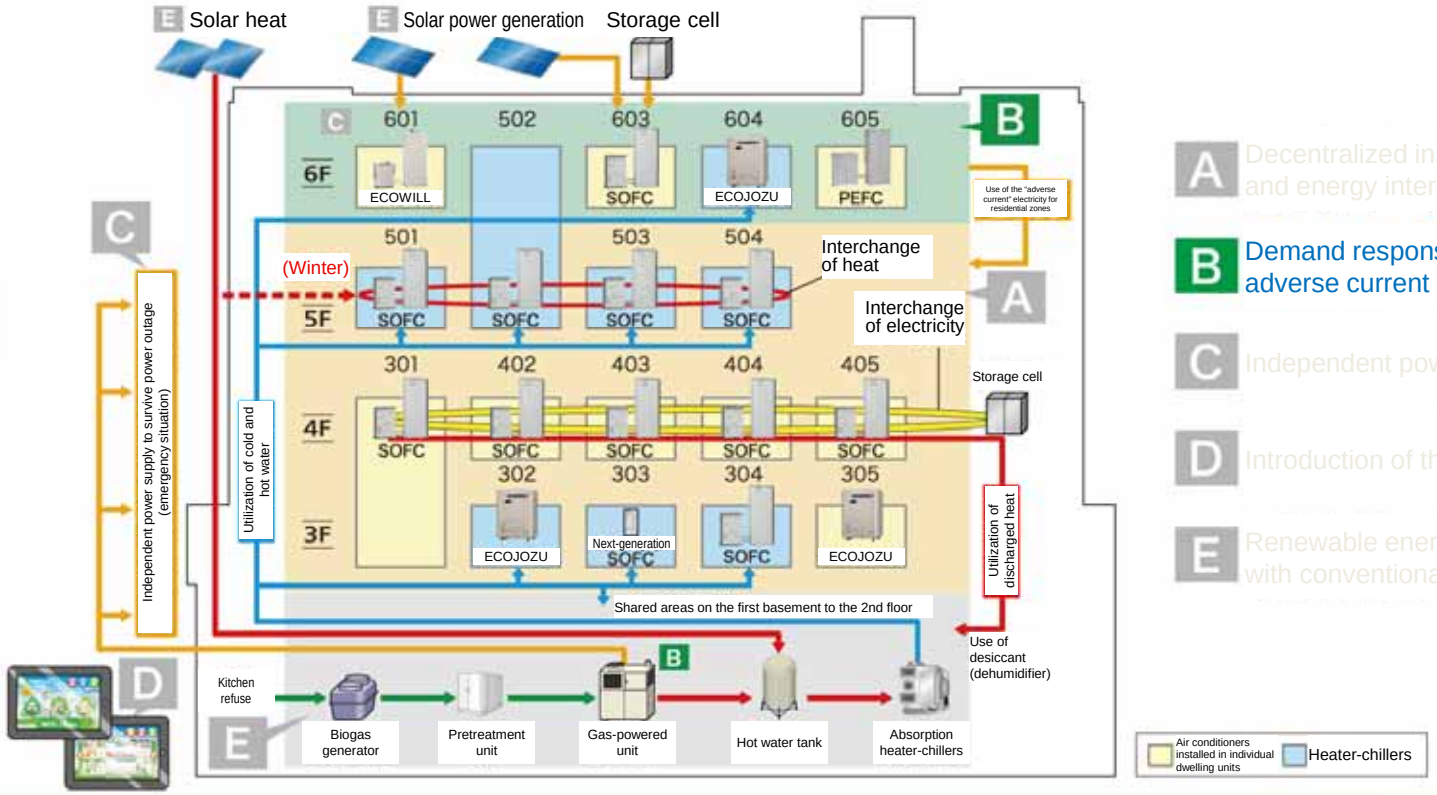

A Decentralized installation of SOFCs and energy interchanges

B Demand response scheme and the adverse current mechanism

C Independent power supply system

D Introduction of the HEMS

E Renewable energy in combination with conventional energy

B. Demand response scheme and the adverse current mechanism

(1) Demand response scheme

Energy-saving needs, etc.

↓

Asked to restrain energy use

→

(1) Residents make energy-saving efforts.

(2) Home CHP systems increase power generation. (Operation control)

ENE-FARM Type S (SOFC)

ENE-FARM (PEFC)

ECOWILL

(3) CHP systems for shared areas increase power generation. (Operation control)

GENELITE (31 kW)

B. Demand response scheme and the adverse current mechanism

(2) Adverse current mechanism with home CHP systems

If the adverse current mechanism works with home CHP systems ….

- The performance of CHP systems can be maximized to save energy.
- Stable supply of surplus electricity to an electrical grid is ensured.

Image of the "adverse current" mechanism (with SOFC)

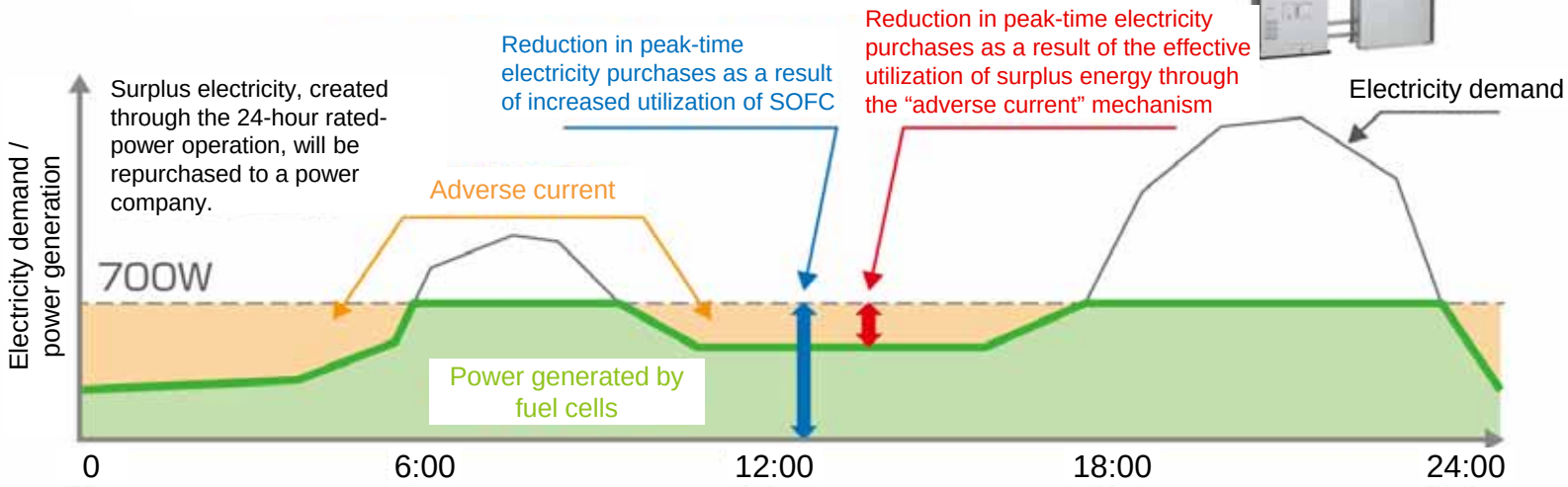

Experimental items for energy systems

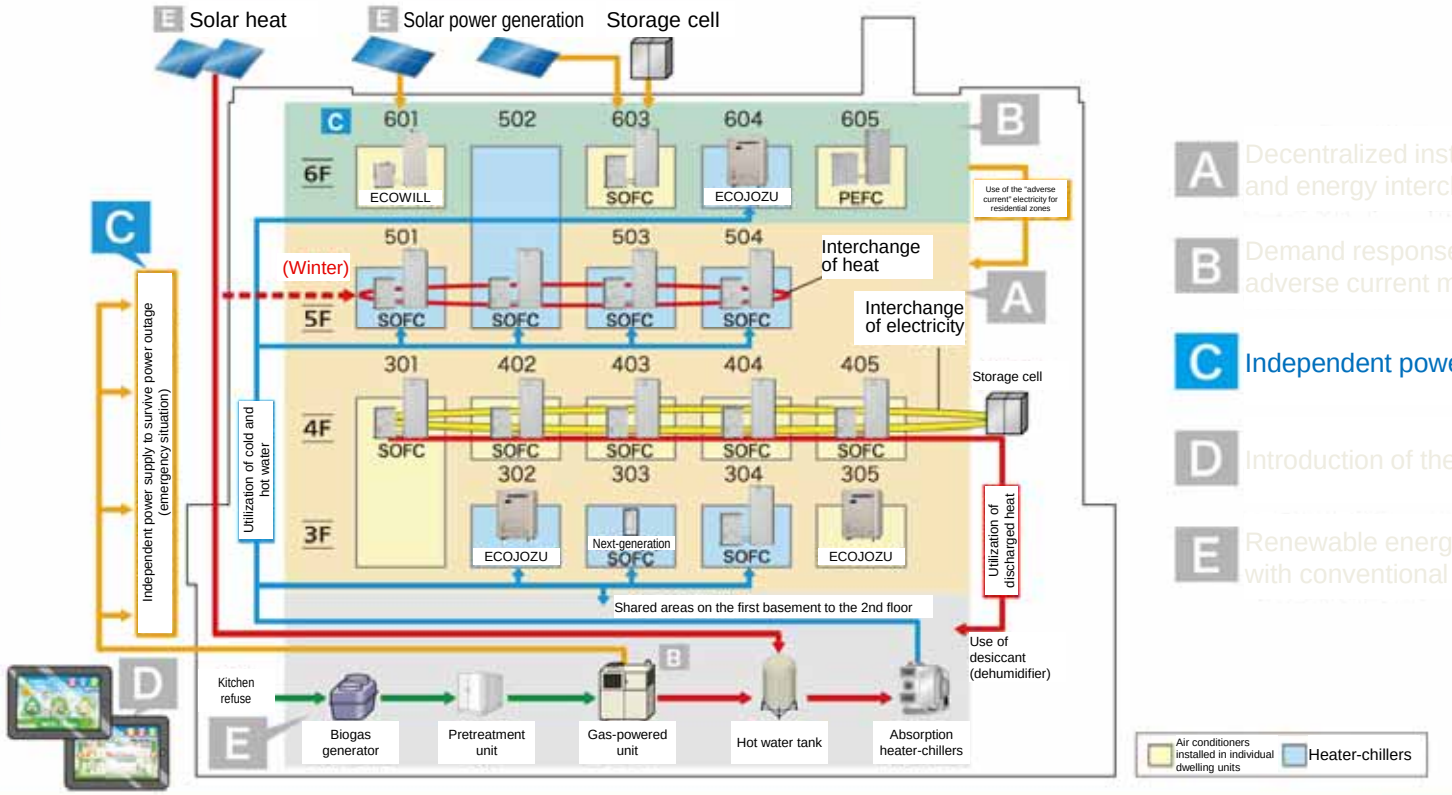

A Decentralized installation of SOFCs and energy interchanges

B Demand response scheme and the adverse current mechanism

C Independent power supply system

D Introduction of the HEMS

E Renewable energy in combination with conventional energy

C. Independent power supply system to survive power outage

Making use of CHP systems to establish an independent power supply system to survive power outage, while contributing energy saving at the same time

At the time of power outage: Gas-powered CHP units (GENELITE) can be turned on to run in self-operation mode.

- **Electricity is supplied to dwelling units.**
- **SOFCs on the 3rd to 5th floors can supply electricity.**

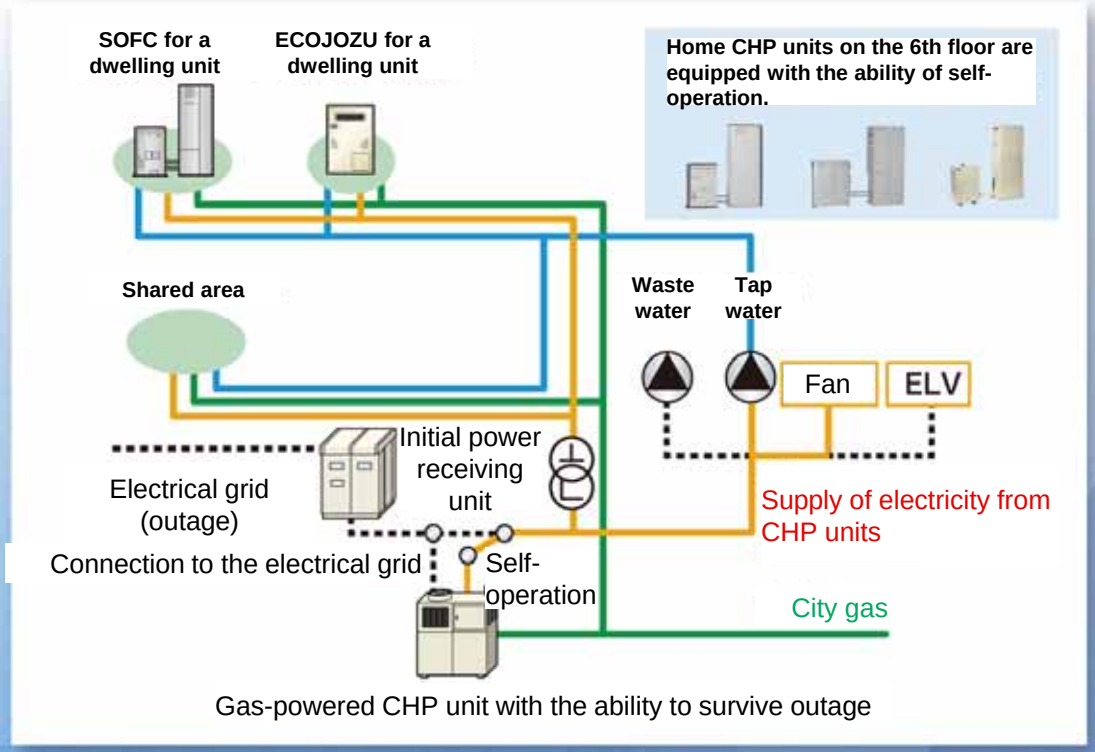

Experimental items for energy systems

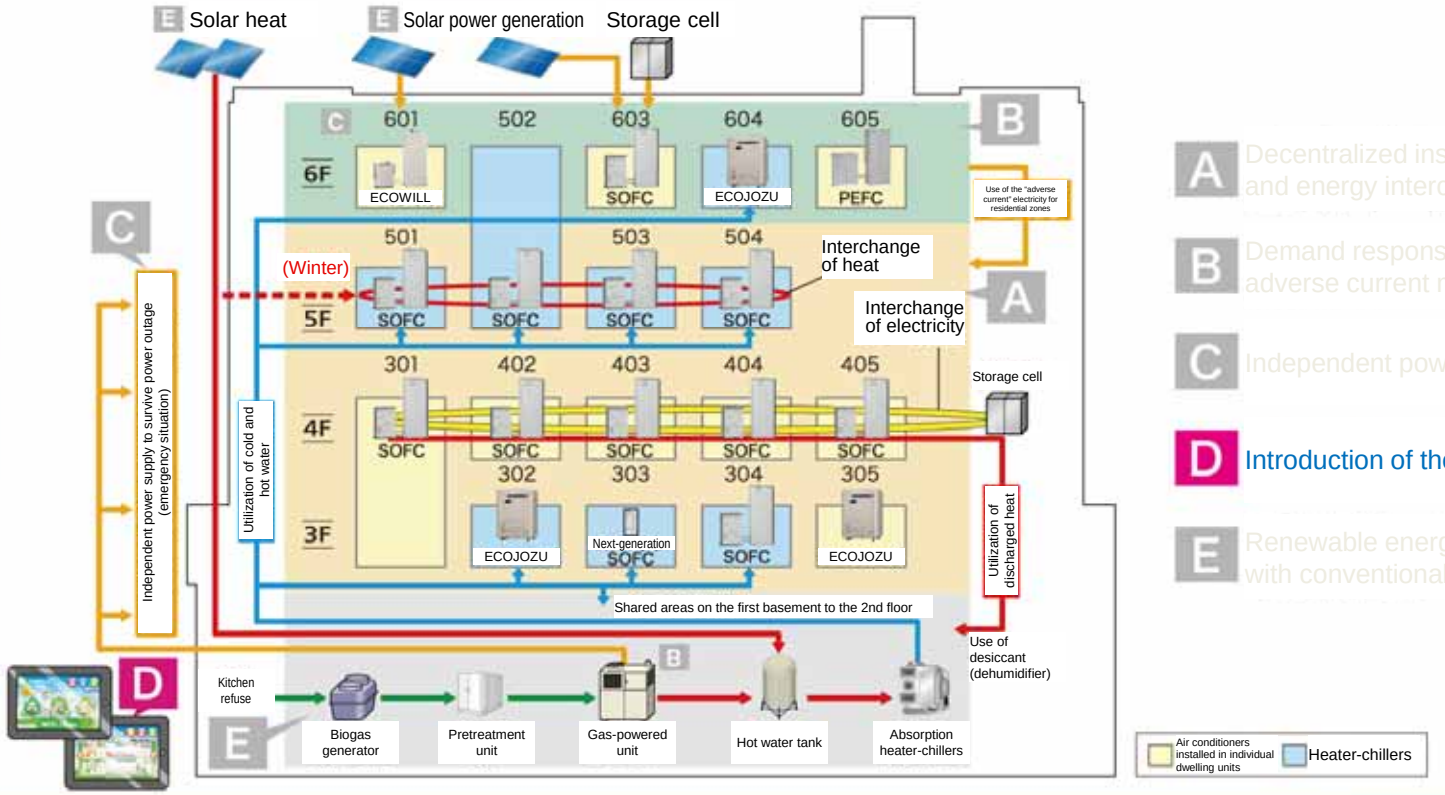

A Decentralized installation of SOFCs and energy interchanges

B Demand response scheme and the adverse current mechanism

C Independent power supply system

D Introduction of the HEMS

E Renewable energy in combination with conventional energy

D. Introduction of the HEMS

(1) Visualization of energy and community services

●HEMS top page

● Estimated utility costs for this month

Visualization of energy

● Updates on consumptions of electricity, gas and water

● Information on actual internal power generation and energy interchanges

● Communication among residents

● Customized calendar for family

●Internet supermarket

Community services

D. Introduction of the HEMS

(2) Demonstration of the next-generation HEMS (Unit #601)

Demonstrating the functions of the HEMS attractive to end users through residential experiments

Tablet

- 10 kinds of operations

- Visualization of energy consumption by room and by energy system/Operation screen display

Wall display

- Understanding of utility costs and the status of energy consumption can be shared by family members who can see the wall display at any time.

Table display

- The tablet terminal can promote family communications regarding the status of their energy consumption and saving needs.

Experimental items for energy systems

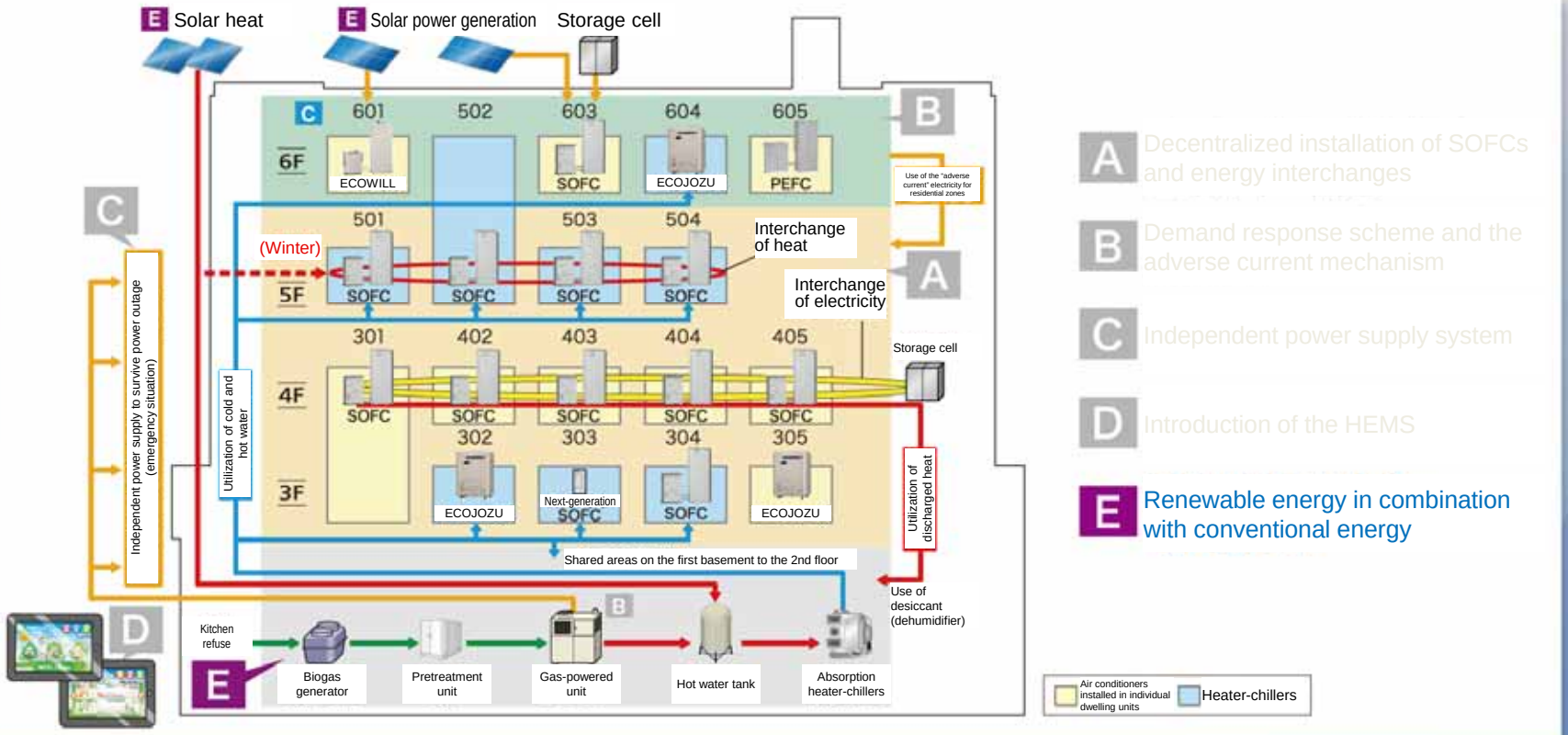

E. Renewable energy in combination with conventional energy

Combining gas systems designed for multifamily housing with renewable energy

Solar thermal energy

Through the utilization of solar thermal energy together with the recycling of waste heat discharged from CHP units, seeking to promote energy saving of the centralized air conditioning system for the residential building

Biogas

- Collecting kitchen refuse to generate biogas
- Blending biogas with city gas to feed into CHP units as fuel

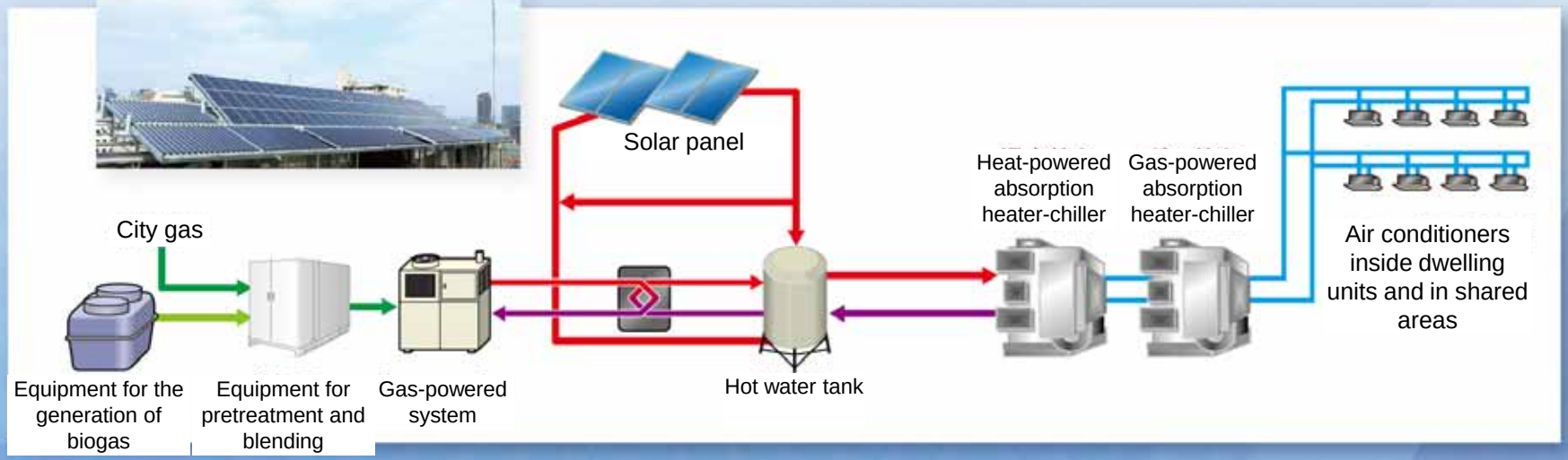

E. Renewable energy in combination with conventional energy

Combining gas systems designed for multifamily housing with renewable energy

■Solar power generation

- Realizing the Smart Energy House with a 3-way power system consisting of SOFCs, storage cells and solar cells (Unit #603)
- Conducting a second demonstration experiment on the Smart Energy House, using a dwelling unit in multifamily housing, following our previous experimental project with an independent house

●Concepts of the Smart Energy House

●"Smart Energy House" Live-in experimental house (Oji-cho in Nara Prefecture)

Experimental items for energy systems

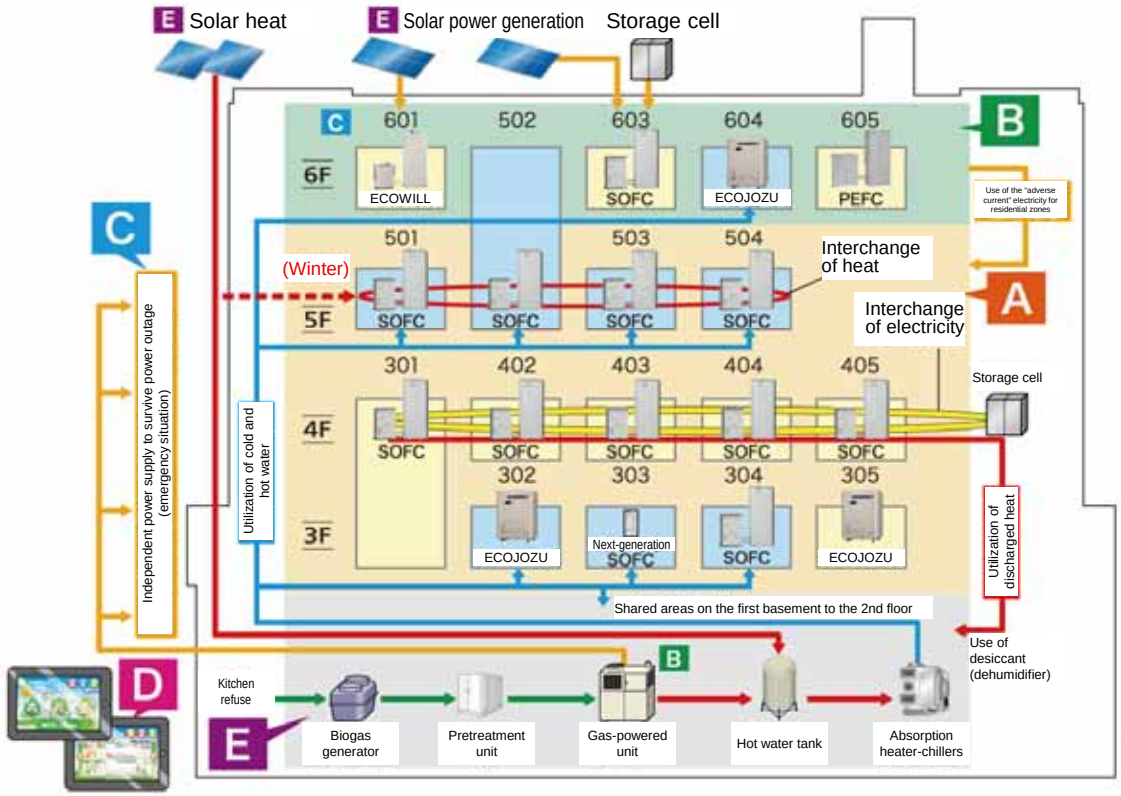

A Decentralized installation of SOFCs and energy interchanges

B Demand response scheme and the adverse current mechanism

C Independent power supply system

D Introduction of the HEMS

E Renewable energy in combination with conventional energy

Aiming at the realization of environmentally friendly and spiritually rich living